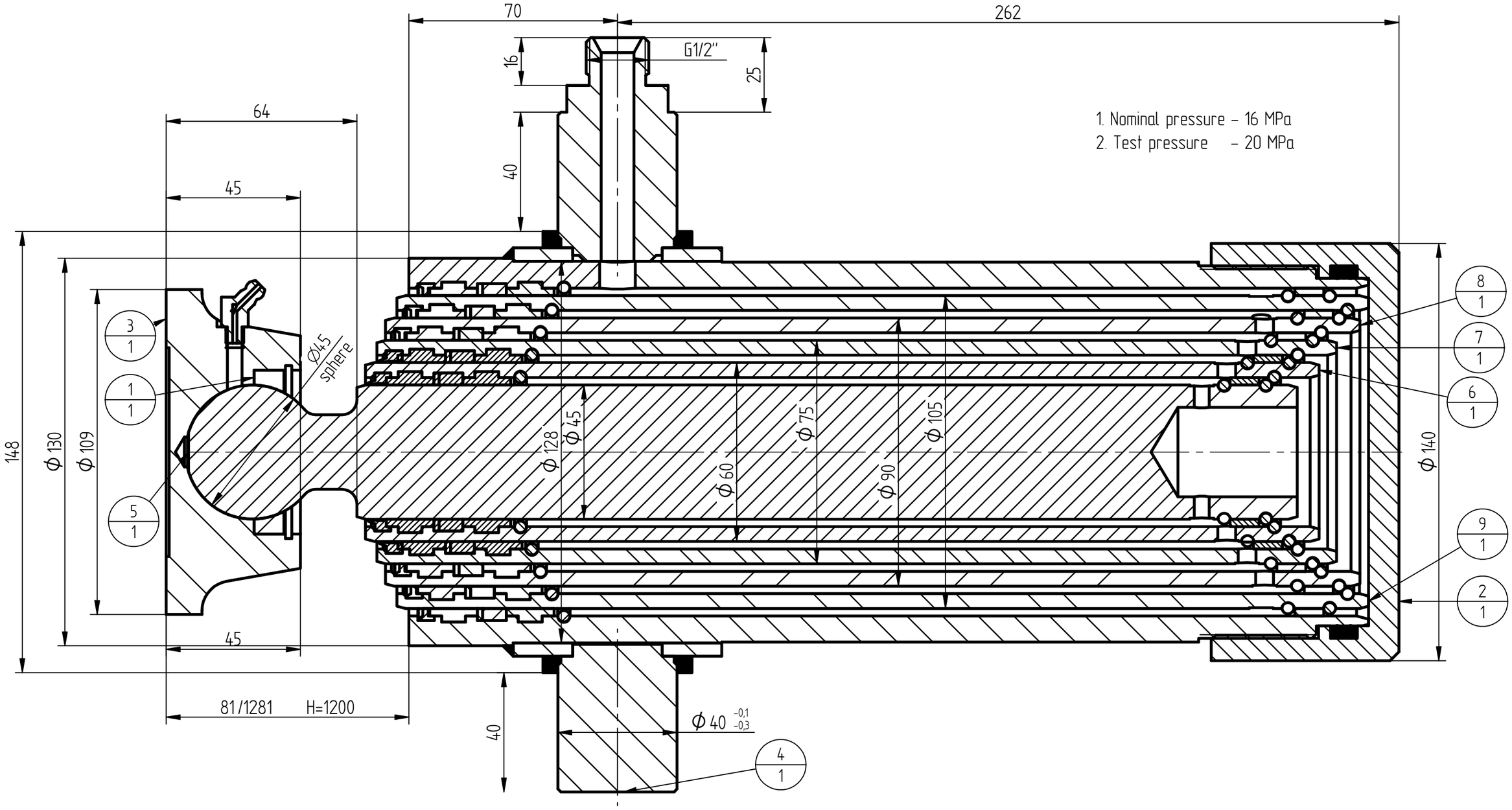

				Mass			
				31,20 kg			
				Quantity	Material	Subst. material	Surface
				1			
	Description				Drawing no.		
	Telescopic cylinder				UCB 105-5-1200		