Di Natale - Bertelli S.p.A.

COSTRUZIONE
CILINDRI
TELESCOPICI

25077 ROÈ VOLCIANO (Brescia) ITALY
Sede legale: via s. Pietro, 76 - Magazzino: via S. Pietro, 120
Tel. +39.0365.63085 - +39.0365.63293 - +39.0365.556919
Fax +39.0365.63461 - Sito Web: www.dinatale-bertelli.com

CILINDRI TELESCOPICI CON 9 SFILATE
TELESCOPIC CYLINDERS WITH 9 EXTENSIONS

VÉRINS TELESCOPIQUES AVEC 9 EXPANSIONS
TELESKOPZYLINDER MIT 9 STUFEN

TYPE S :
SFERA
ROTULE
BALL
KUGEL

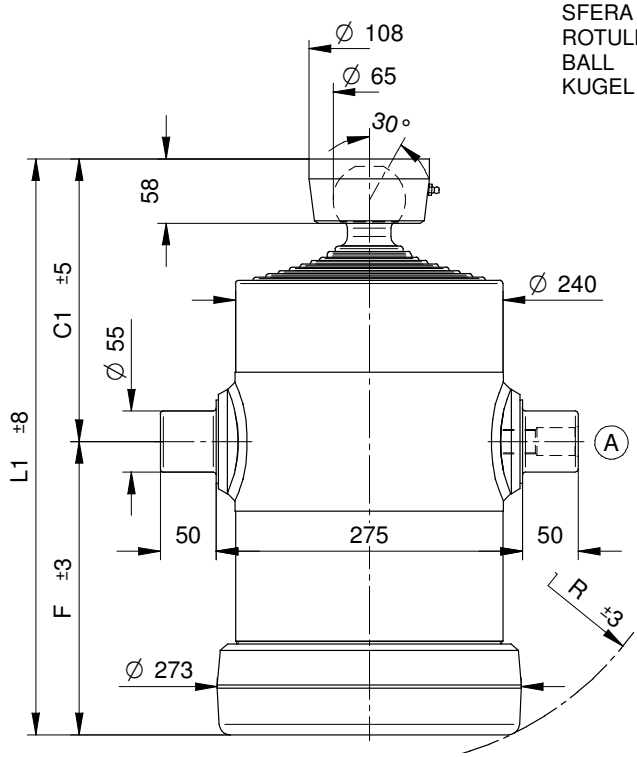

NORME DI SICUREZZA E PRECAUZIONI DI MONTAGGIO, VEDI Pag. 6
IMPORTANT SAFETY INSTRUCTIONS AND PRECAUTIONS FOR MOUNTIG, Page 6
NORMES DE SECURITE' ET PRECAUTIONS DE MONTAGE, VOIR Page 7
SICHERHEITSBESTIMMUNGEN UND VORSICHTSMAßNAHMEN FÜR DEN EINBAU, Page 7

*KIT GUARNIZIONI, SEALS KIT, KIT DE JOINTS, DICHTUNGSSATZ : **SGS061-210***

STANDARD

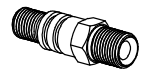

(A) 26100000 *3/4* gas

OPTIONAL

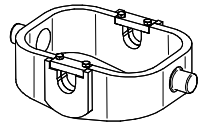

CULLA8

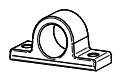

SUP055

SUP055-A

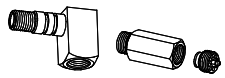

26320000 27230000

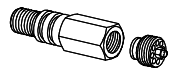

71780000 1/2 Gas
71560000 3/4 Gas

CH065-2782

PESO TOT. RIBALTABILE 20 Ton. a 180 Bar
POIDS TOT. BASCULABLE 20 Ton. à 180 Bar

TOTAL WEIGHT TIP-UP 20 Ton. 180 Bar
GESAMTGEWICHT ANHÄNGER 20 Ton. 180 Bar

TIPO TYPE TYPE TYP	DISEGNO – DRAWING DESSIN – ZEICHNUNG	CORSA – STROKE COURSE – HUB	Ø SFILATE mm / Ø EXPANSIONS mm / Ø EXTENSIONS mm / Ø STUFEN mm									DIMENSIONI CILINDRO / DIMENSIONS VÉRIN / CYLINDER DIMENSIONS / ZYLINDER ABMESSUNGEN						L.sfilata – L. extension L.expansion – L. stufen	Peso – Kg – Weight	Poids - Kg – Gewicht	Volume olio Lt. Amount of oil Lt. Volume huile Lt. Ölinhalt Lt.
			61 TON. 5,2	76 TON. 8,1	91 TON. 11,7	107 TON. 16,1	126 TON. 22,4	145 TON. 29,7	165 TON. 38,4	187 TON. 49,4	210 TON. 62,3	C	C¹	F	L	L¹	R		F	S	
				*16	*15																
9009	12885	**1940**	●	●	●	●	●	●	●	●	●	-	230	210	-	440	248	300	-	115	28,5
9010	12886	**2120**	●	●	●	●	●	●	●	●	●	-	230	230	-	460	265	320	-	124	31
9011	12887	**2250**	●	●	●	●	●	●	●	●	●	-	230	245	-	475	277	335	-	129	33
9012	12888	**2585**	●	●	●	●	●	●	●	●	●	-	250	270	-	520	300	380	-	141	37
9013	12889	**2945**	●	●	●	●	●	●	●	●	●	-	250	310	-	560	335	420	-	154	42,5
9014	12890	**3215**	●	●	●	●	●	●	●	●	●	-	250	340	-	590	364	450	-	163	46,5
9015	12891	**3635**	●	●	●	●	●	●	●	●	●	-	250	390	-	640	410	500	-	178	53,5
9016	12892	**3995**	●	●	●	●	●	●	●	●	●	-	250	430	-	680	448	540	-	190	59
9017	12893	**4265**	●	●	●	●	●	●	●	●	●	-	250	460	-	710	478	570	-	199	63

PRESSIONE MAX. DI ESERCIZIO 200 BAR - PRESSION MAX. DE SERVICE 200 BAR
WORKING MAX. PRESSURE 200 BAR – MAX. BETRIEBSDRUCK 200 BAR

CARATTERISTICHE TECNICHE DATE A TITOLO PURAMENTE INDICATIVO E MODIFICABILI SENZA PREAVVISO - THESE TECHNICAL SPECIFICATIONS ARE ONLY APPROXIMATE VALUES AND MAY BE CHANGED WITHOUT ANY PREVIOUS NOTICE
CARACTERISTIQUES TECHNIQUES DONNES A TITLE PUREMENT INDICATIF ET MODIFIABLES SANS PREAVIS - DIESE TECHNISHEN DATEN GELTEN NUR ALS RICHTWERTE UND KONNEN OHNE VORANMELDUNG GEÄNDERT WERDEN